Tweaking tasks to impact engagement and learning

Dr Yvonne Reilly

Sunshine College

MAV 2024

2008-2010

2011-2015

PROFESSIONAL DEVEL

conferences • workshops • associations • noticebo

VALUE ADDING *maths*

CHELSEA ATTARD

WHAT do you get when you subtract streamed classes and textbooks from maths education, and add effective differentiation and a growth mindset?

Jodie Parsons and Yvonne Reilly know the answer, and they shared it with the world during the Institute of Mathematics and its Applications (IMA) International Conference in Glasgow in June.

Parsons, leading teacher – curriculum design and delivery, and Reilly, leading teacher – maths and numeracy at Victoria's Sunshine College, say the school has completely changed its delivery of maths in recent years.

"Now we have no textbook, students are no longer streamed, so all who are in that year level are working in the same classroom," Reilly says. "We have teams of teachers working together to create the curiculum, and we have teams of teachers working in the classrooms to deliver it. It just means we have really effective lessons that are differentiated ... we've got many learning outcomes that address the needs of every student in the class, and we've got really good results because of the way we're doing it now," she adds.

Keen to share their innovative approach with other educators, Parsons and Reilly applied to speak at the IMA conference.

"The conference topic was about barriers and enablers for students to learn mathematics so it was focussing on, 'what are the struggles that students face when learning mathematics from primary school all the way to university, and what strategies people have used successfully around the world to combat that', and we felt we really had the answer to that," Parsons says.

The pair spoke about effective differentiation, hitting students' zones of proximal development, and the importance of developing a growth mindset in students.

"The only thing we emphasise here is progress, so we're all about value adding," Reilly says.

"The students don't necessarily have any control over the level they're at when they arrive at the school, so it doesn't matter to us what level they're at, as long as we can push them forward and that works, because we're accelerating everyone, not just the top 25 students in the year..."

Parsons says although their approach often seems overwhelming at first, she and Reilly received some great feedback from delegates following the presentation.

"I think it's not until you sit down with people and you talk about all of the steps and the strategies necessary that they realise the enormity of implementing a program like this, however it's absolutely worthwhile for them," Parsons says.

Sunshine Col
plenty of attent
teaching, but
their work to the world stage has
really taken things up a notch.

"We had access to people at the very highest levels in maths education and maths research in the UK and in Ireland ... so we were able to have some really fantastic high level conversations about maths education," she says.

"We've got someone from the University of Coventry interested in running a pilot study on the work that we do and she was talking about running a pilot study in Mexico. We would just be thrilled about that if that happened."

Next on the agenda for these passionate maths teachers is a professional development session they will run on November 2, titled Differentiation: How to create, deliver, assess and survive!

Visit *eding.co/THLJmsc*f for more details.

TEACHING WITHOUT TEXTBOOKS

A new way of teaching maths

Teachers Yvonne Reilly and Jodie Parsons from Sunshine College have created a new way of teaching maths, without the use of text books or homework

WEDNESDAY, SEPTEMBER 4, 2013 THE AGE
NEWS 11

Results add up for maths with a difference

Benjamin Preiss
Education reporter

Sunshine College maths teacher Yvonne Reilly watches her students arguing about their work, throwing dice and sharing answers in her classroom. But that is just how she likes it.

Ms Reilly has dispensed with textbooks and traditional teaching methods, and the results show students are improving substantially. In her "differentiated" classes, students choose tasks from three levels of difficulty, although they are all learning the same concept.

Ms Reilly teaches about 50 students at a time, with up to two supporting teachers.

The teachers roam the classroom, helping students solve problems they might encounter outside school. In a typical lesson, the students roll dice to generate queue times for rides at an amusement park.

Advanced students huddle around a whiteboard once they complete their tasks as Ms Reilly challenges them with more complex ideas.

She has learnt to accept the noise and movement in her classes because she can see the students concentrating and learning.

"For someone who's come from a very structured and normal maths class, that would seem pretty chaotic," she said.

Ms Reilly, who was born in Scotland, had completed degrees in biochemistry and pharmacology, and worked as a research scientist in Britain for eight years before coming to Australia in 2006.

The following year, she began teaching maths and science at Sunshine College, where she is now the leading numeracy teacher.

At the time, the school's improvement levels lagged behind the state average. School principal Tim Blunt was worried about how to turn the results around, when Ms Reilly and a fellow teacher approached him with the new ideas for teaching.

"They said that they'd like to try running a program where teachers got together and designed the work that was going to be delivered to the kids on an individual basis," he said. "We got rid of the textbook. None of the students in years 7, 8 and 9 use a textbook."

Mr Blunt said last year's maths results showed students made good progress.

"It was the first time that the NAPLAN results had what was called a relative growth measure, and we found that across the college [at] our three junior campuses we had about 40 per cent of our year 9 students getting high relative growth, where the state average is about 25 per cent."

He said teachers from more than 30 schools throughout Australia had visited Ms Reilly's classes to learn how they can improve their own maths teaching.

Ms Reilly and fellow teacher Jodie Parsons, who also designed the program, have written books about their classes that have sold around the world and have spoken at international conferences.

Ms Reilly also uses the "scaffolding numeracy" teaching method created by RMIT, in which students are divided into eight levels according to their ability.

State schools are now desperate to attract qualified maths teachers.

Ms Reilly's credentials include a master's degree in leadership and numeracy.

Ms Reilly believes her studies have paid off because they helped her introduce the changes at the school, helping many students reach their potential.

"Our kids are better off here than they are anywhere else and I'm really happy about that," she added.

b.preiss@theage.com.au

Textbook-free: Teacher Yvonne Reilly in class. Photo: Justin McManus

THE AGE online **On the web** Watch a video of Yvonne Reilly in action in the classroom.

Reciprocal Teaching in Mathematics.

Yvonne Reilly, Jodie Parsons and Elizabeth Bortolot.

Sunshine College, Victoria.

An exploration of the use of reciprocal teaching as a tool to improve student literacy and comprehension in mathematics.

Introduction

As stated in the June 2009 Department
Childhood Development (DEECD) pu
practice: teaching, learning and using m
better described as mathematical literacy;
behaviours and dispositions important for
society". As teachers of mathematics, w
students were under-performing whe
mathematical problems, i.e. that o
mathematically literate.

Although we recognize that the building
described by Marzano (2005) is

An Effective Numeracy Program for Middle Years.

Yvonne Reilly, Jodie Parsons and Elizabeth Bortolot,
Sunshine College

An holistic approach to improving student numeracy through the implemention of an
Mathematics program for all middle years students, incorporating problem
improving mathematical literacy, information and communication technology
scaffolding of numeracy concepts in a fully differentiated classroom.

Introduction

Sunshine College is a multi-campus Government secondary school located in the Western Metropolit
(WMR) of Melbourne. It was formed in 1991, following the reorganisation of six secondary schools
enrolment of approximately 1000 students. It is positioned across four sites and is made up of th
campuses including a deaf facility and one senior campus. It is a culturally diverse school with mor
language backgrounds. The population, in general, suffers a high degree of disadvantage and a l
economic position. In excess of 60% of families are in receipt of Educational Maintenance Allowan
(according to the school's Annual Report 2008).

In general, the majority of Mathematics classes at Sunshine College are teacher directed with the
teacher delivering the lesson from the front of the room. The teacher will then complete a number
examples on the board, which the students copy into their workbooks followed by various exercises from the
Mathematics textbook. Classes rarely use concrete manipulatives; students are expected to work individually;
assessment is summative; and the opportunity for modification is limited with weaker students expected to
complete fewer examples than the more competent students. On each of the junior sites all students receive four
fifty-minute periods of Mathematics instruction per week.

In 2008 and after several years of consistently worsening data (AIM & VCE), and the placement of several
numeracy coaches from the WMR, Yvonne Reilly and Jodie Parsons began to develop an alternative numeracy
program.

The Whole School Numeracy Program

The pedagogy of the revised whole school numeracy program is purposeful. The curriculum is derived from the
VELS Mathematics continuum and each unit of work is based on understanding the Victorian Essential
Learning Standards (VELS) levels of our students as determined by On-Demand data.

Delivering Differentiation in the Fully Inclusive, Middle Years' Classroom

Yvonne Reilly and Jodie Parsons

Sunshine College, Victoria.

Despite the universal acceptance that no classroom i
homogenous group of students, the actual task of providin
lesson which accommodates the needs of all students is suc
challenge that it is not surprising that many teachers op
"teach to the middle" in the hope that the majority of stud
have their learning needs met. This paper will describe
model of practice which demonstrates how to effectively p
and deliver a fully differentiated and inclusive maths lesso
the middle years' classroom. The philosophy for this mode
to empower all learners to choose a task which is "just rig
for them.

In the first part of the twentieth century, psychologists and scholars belie
an individual's capacity to learn was a predisposed facet to their intellectu
up which could be neither influenced nor changed. (Binet, 1909; Kohler
This meant that the learning process was entirely dependent up
developmental stage of the individual.

By the middle of the century, Piaget's (1952) research into the c
development of children and specifically how they assimilate number c
(1942) agreed with the earlier researchers that what a child is able to
determined by the maturity of the child.

In 1978, an alternate view of how cognitive development occurs was p
by a contemporary of Piaget; Lev Vygotsky. Vygotsky's previous work

Effective Differentiation: Where a Growth Mindset Meets the ZPD *

Yvonne Reilly and Jodie Parsons

Sunshine College

The challenge of practically providing each student in a class with the opportunity to work at their own Zone of Proximal Development (ZPD) (Vygotsky, 1978), is often insurmountable to many practitioners. Our model not only alleviates the practical aspects of this challenge, but in addition, creates an environment where students believe that they can improve and an environment where students are expected to identify and select the activity which is "just right" for their learning requirements.

Introduction

Sunshine College is a multi-campus Government secondary school located within the South Western Victorian Region. It is positioned across four sites and is made up of three junior campuses, including a deaf facility and one senior campus. It is a culturally diverse school with more than fifty language backgrounds. The population, in general, suffers a high degree of disadvantage and a low socio-economic position, with an average Student Family Occupation (SFO) index of 0.8, and a school ICSEA value of 909. Our distribution of students compared with the Australian average is shown in Figure 1.

Identifying a hierarchy of reflective practices.

Yvonne Reilly and Jodie Parsons, Sunshine College, Victoria.

The analysis of standardised test data such as NAPLAN (National Assessment Program - Literacy And Numeracy), PISA (Programme for International Student Assessment) and TIMSS (Trends in International Mathematics and Science Study) are often the incentive for education systems and individual schools to initiate changes which are hoped will improve student outcomes. The data along with other standardise measures (On-Demand, Victorian Curriculum and Assessment Authority) are then engaged to track the effectiveness of the change.

mpus secondary school situated in the western
him a community which suffers a high degree
2). In 2007, a dedicated whole-school literacy
9 by the introduction of a junior years maths
heralded the beginning of a significant
determined by NAPLAN, On-Demand and

k in the then Western Metropolitan Region
o a similar level of regional support funding
ssues, very few schools were able to make
ns College achieved, being named as one of
effectiveness of the school (Gretton, Institu
d possible reasons for this disparity.

l team striving to change student outcomes,
ssment tools, pre and post topic assessment,
is of these data are essential component to
hilst providing a degree of accountability.

lication of the analysis of standardised testing
d outcomes, although this is undoubtedly an
or the analysis and response to Behavioural
o fully to understanding how to improve

Victorian Education Excellence Awards
THE EDUCATION STATE
VICTORIA
Learning
Sunshine College
School Advancement and Lindsay Thompson of the Year 2015
Educational excellence deserves to be recognised.
2016 award nominations now open.
What makes our teachers great is worth celebrating. As part of the Education State, we thank you for inspiring young minds, contributing to educational outcomes and delivering new learning experiences.

2015

Currently

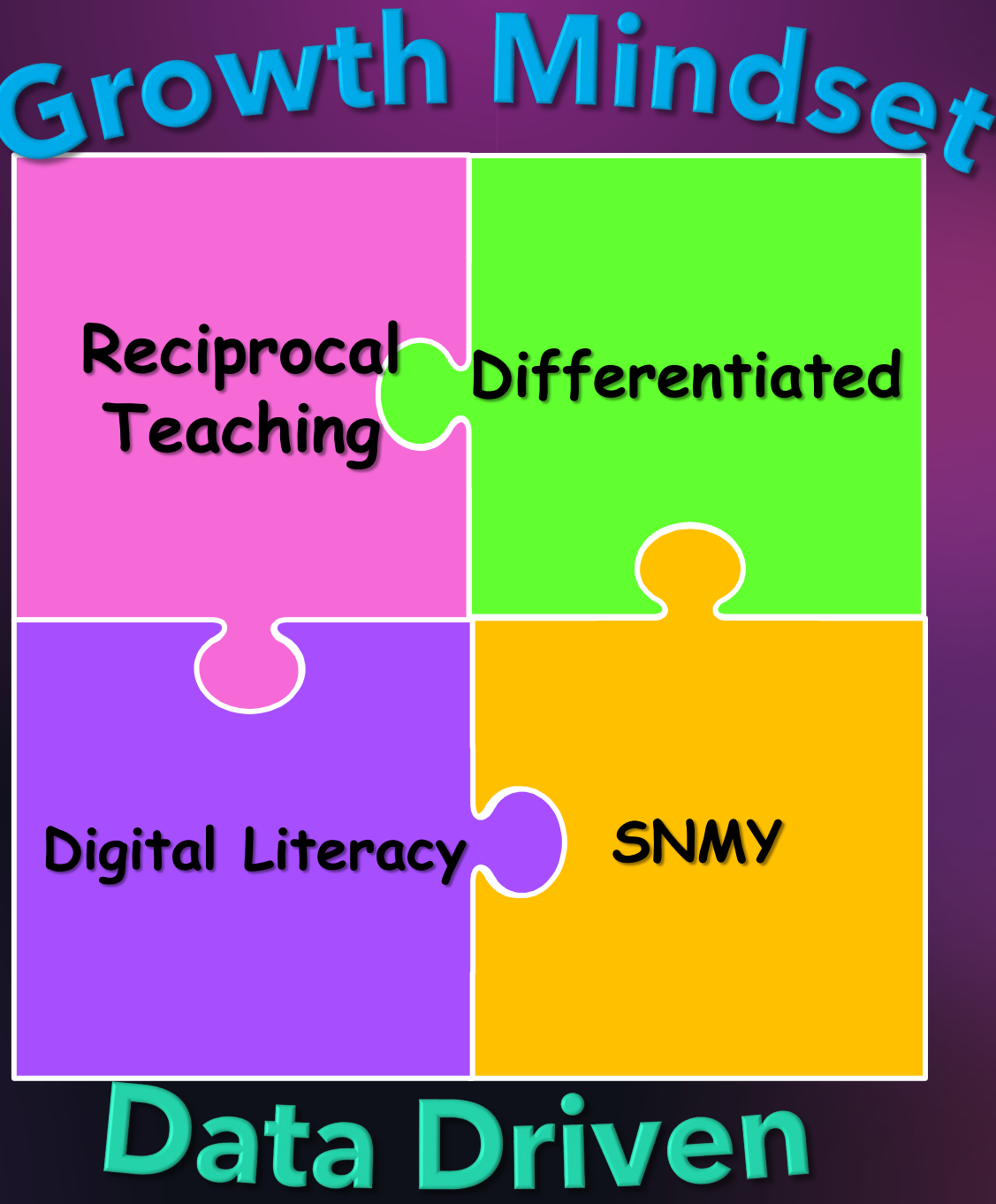
Growth Mindset
Reciprocal Teaching
Differentiated
Digital Literacy
SNMY
Data Driven

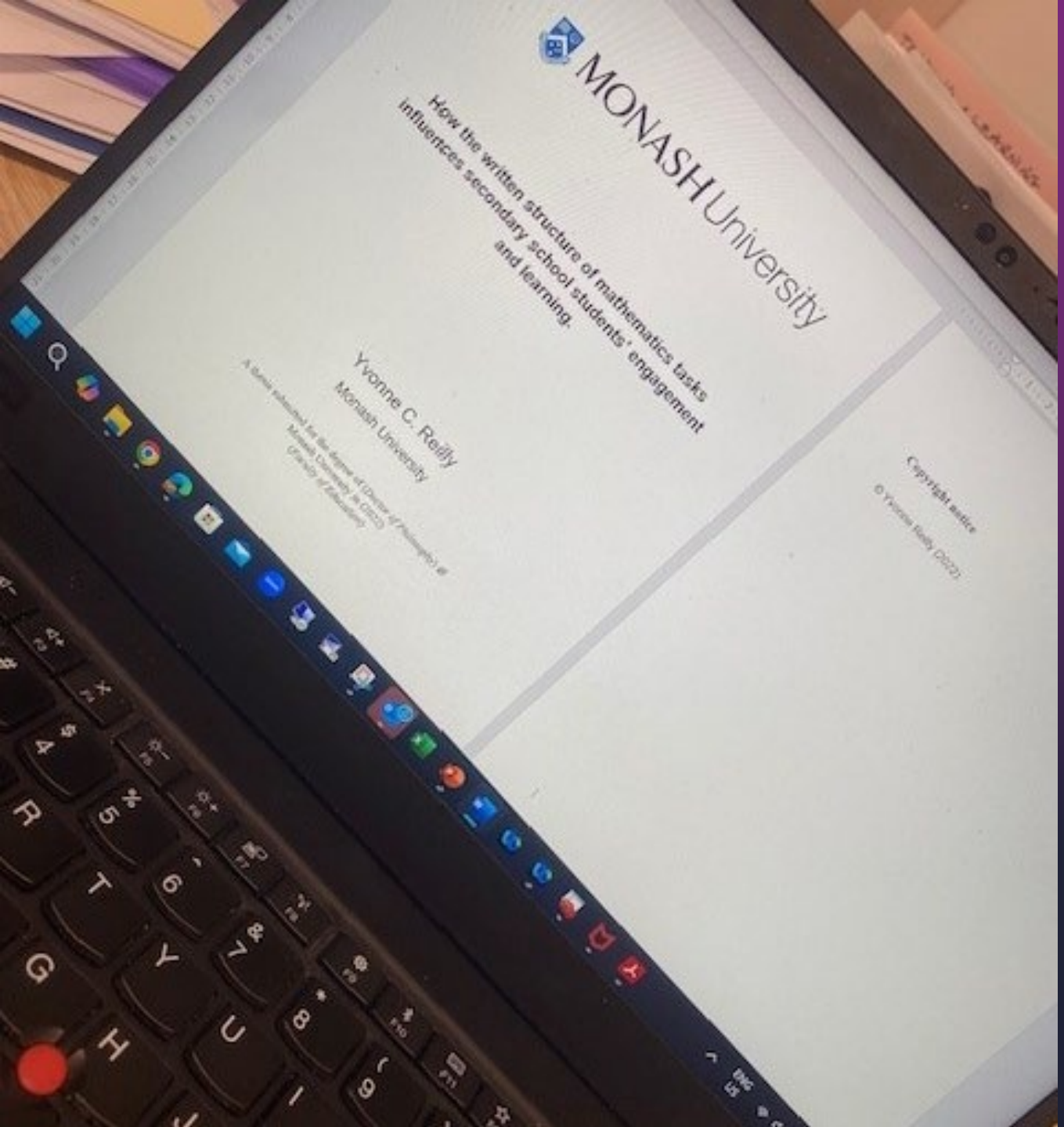
MONASH University
How the written structure of mathematics tasks influences secondary school students' engagement and learning
Yvonne C. Reilly
Monash University
Copyright notice

2023

2024

MONASH
EDUCATION
MONASH
University
JEFF NORTHFIELD MEMORIAL AWARD
FOR EXCELLENCE IN TEACHER
RESEARCH
Yvonne Reilly
Arts
Centre
Melbourne

2024 The Grandbabies Edition

Classroom teacher

Sunshine College - Year 9

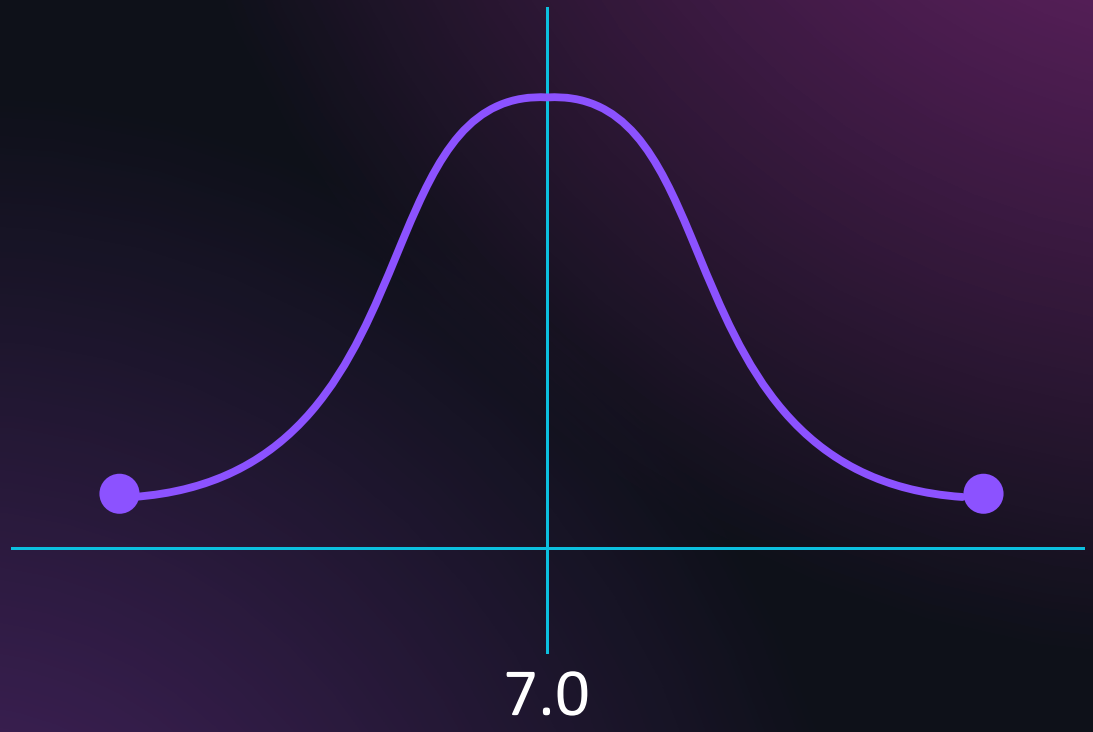

Victoria - Year 9

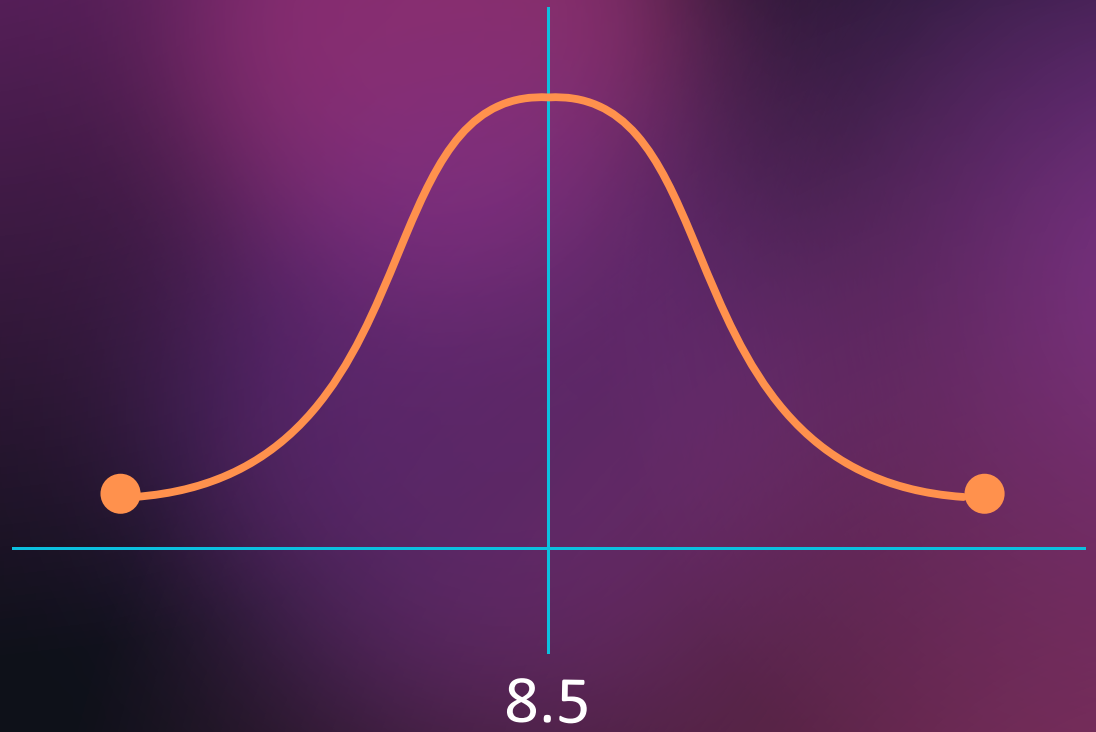

The Context

Sunshine College - Year 9

Victoria - Year 9

Sunshine College - Year 9

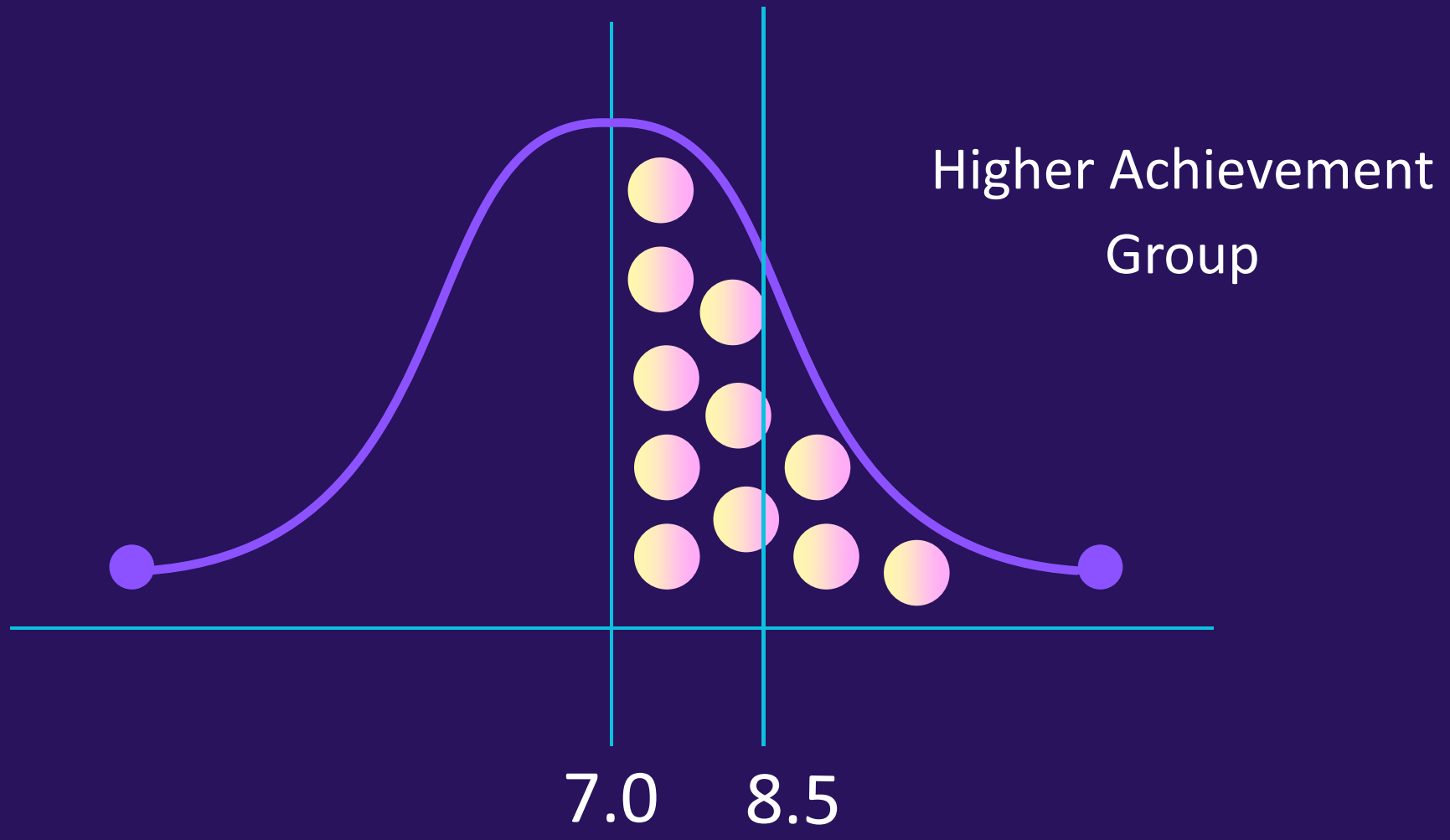

Sunshine College - Year 9

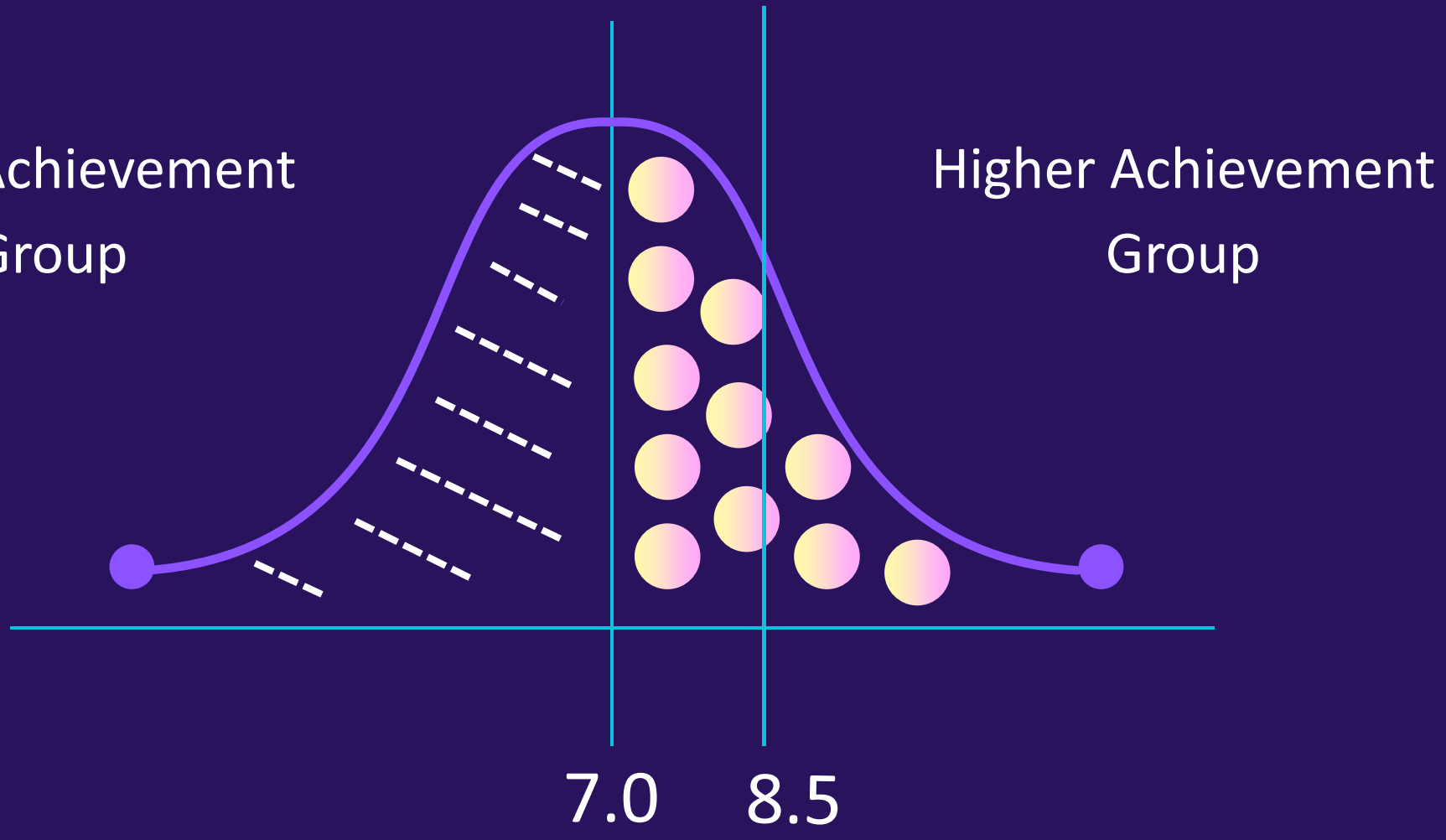

The Study

What kind of tasks engage maths students?

What type of tasks will generate student learning?

The Study

Simple appearance

A Odd Containers

If this container was half full, what volume would remain empty?

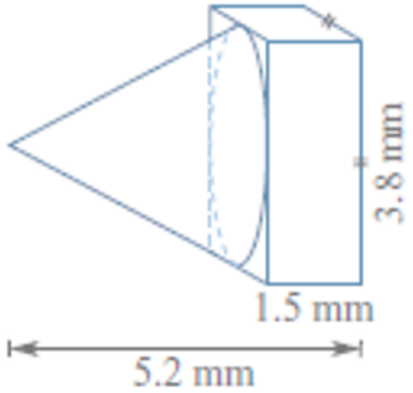

Traditional appearance

B Odd Containers

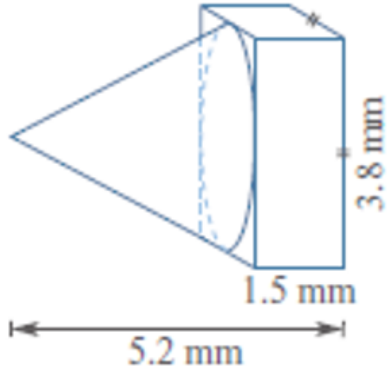

a) Calculate the height of the cone portion of this container.

b) If the volume of a cone is given by:

$V = \frac{1}{3}\pi r^2 h$

Find the total volume of the cone.

c) If this container was half-filled with a liquid, what volume would remain unfilled?

Which task would you rather do?

75% **prefer the task they think is easier**

Which task do you find easier?

The Study

A Odd Containers

If this container was half full, what volume would remain empty?

50%

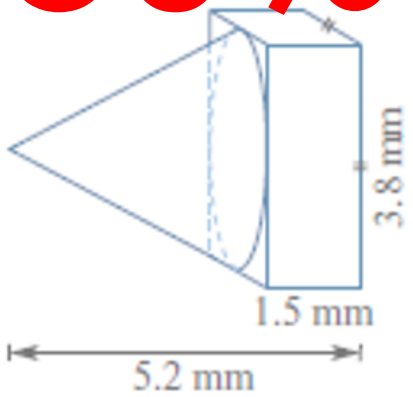

B Odd Containers

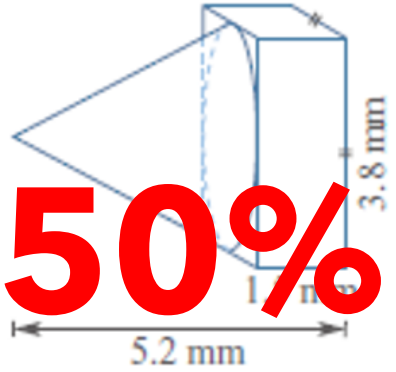

50%

a) Calculate the height of the cone portion of this container.

b) If the volume of a cone is given by:

$V = \frac{1}{3}\pi r^2 h$

Find the total volume of the cone.

c) If this container was half-filled with a liquid, what volume would remain unfilled?

80% of this group prefer to do the easier task

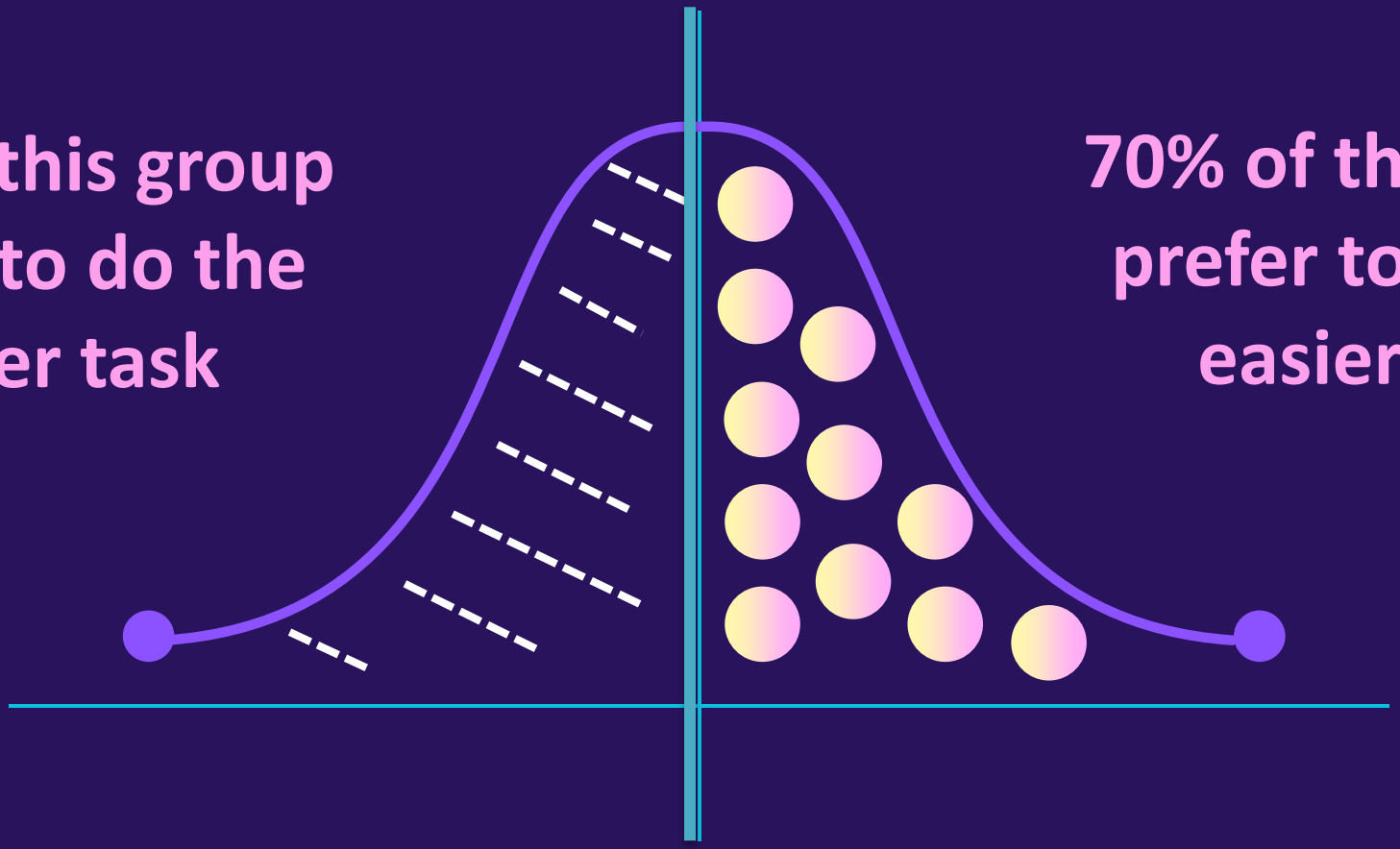

70% of this group prefer to do the easier task

Lower Achievement Group

Higher Achievement Group

A Odd Containers

If this container was half full, what volume would remain empty?

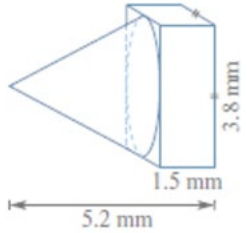

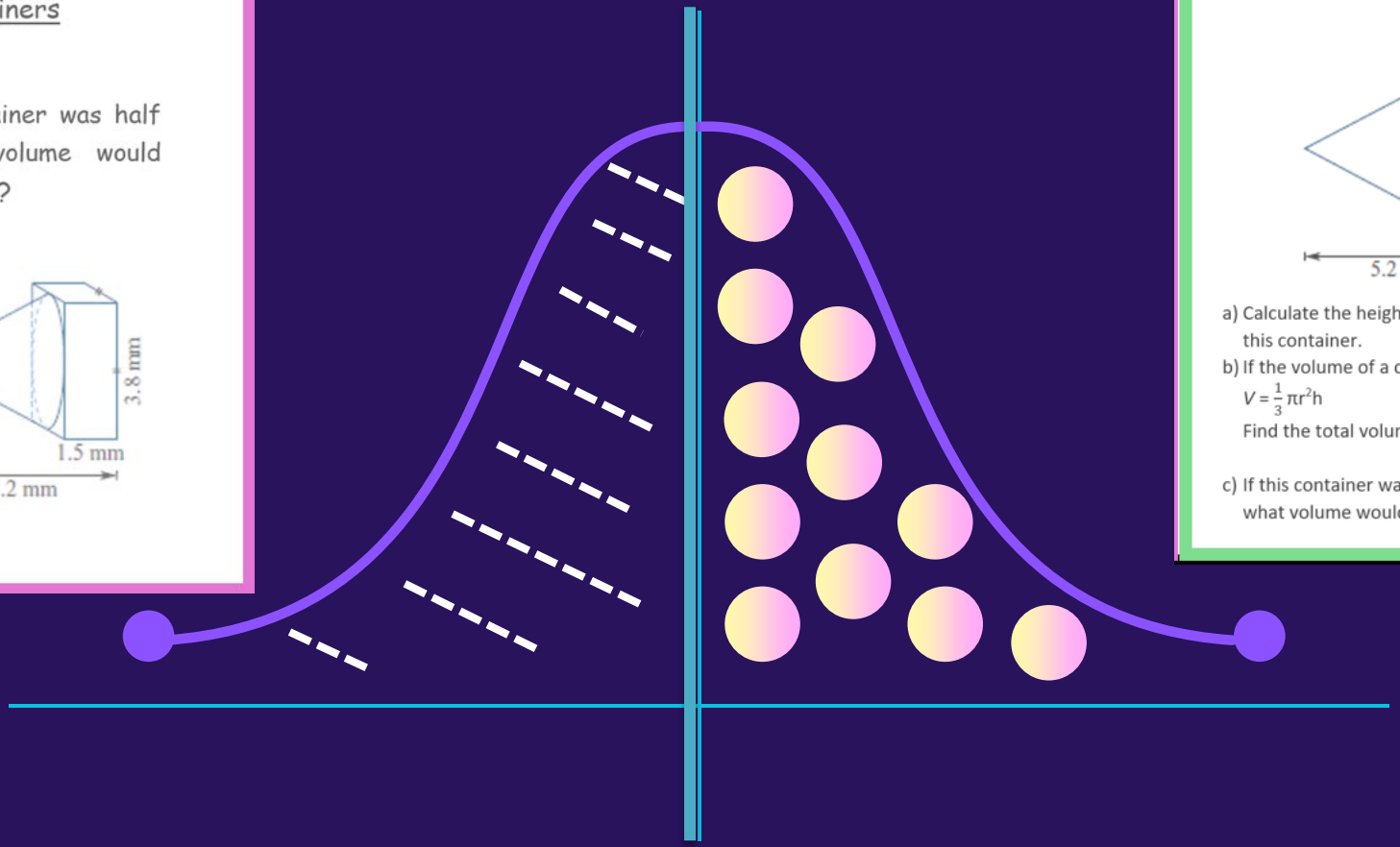

B Odd Containers

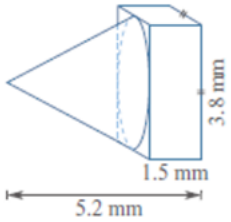

a) Calculate the height of the cone portion of this container.

b) If the volume of a cone is given by:

$V = \frac{1}{3}\pi r^2 h$

Find the total volume of the cone.

c) If this container was half-filled with a liquid, what volume would remain unfilled?

Lower Achievement Group

Higher Achievement Group

Number 1 reason for opinion that the task was easier…

Mathematics information in the other one is *confusing*

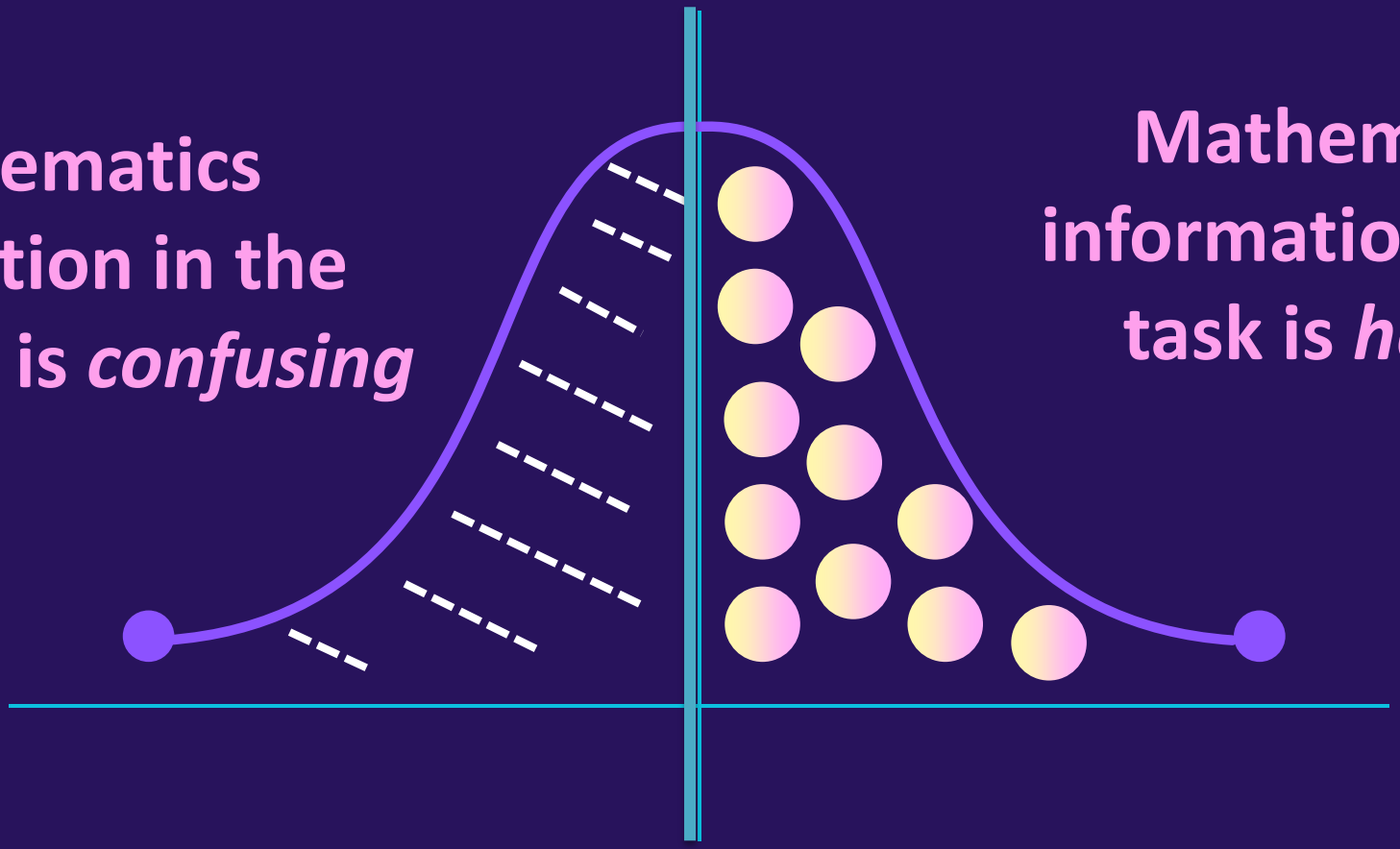

Mathematics information in this task is *helpful*

Lower Achievement Group

Higher Achievement Group

Number 2 reason for opinion that the task was easier…

Fewer steps

Broken down into steps

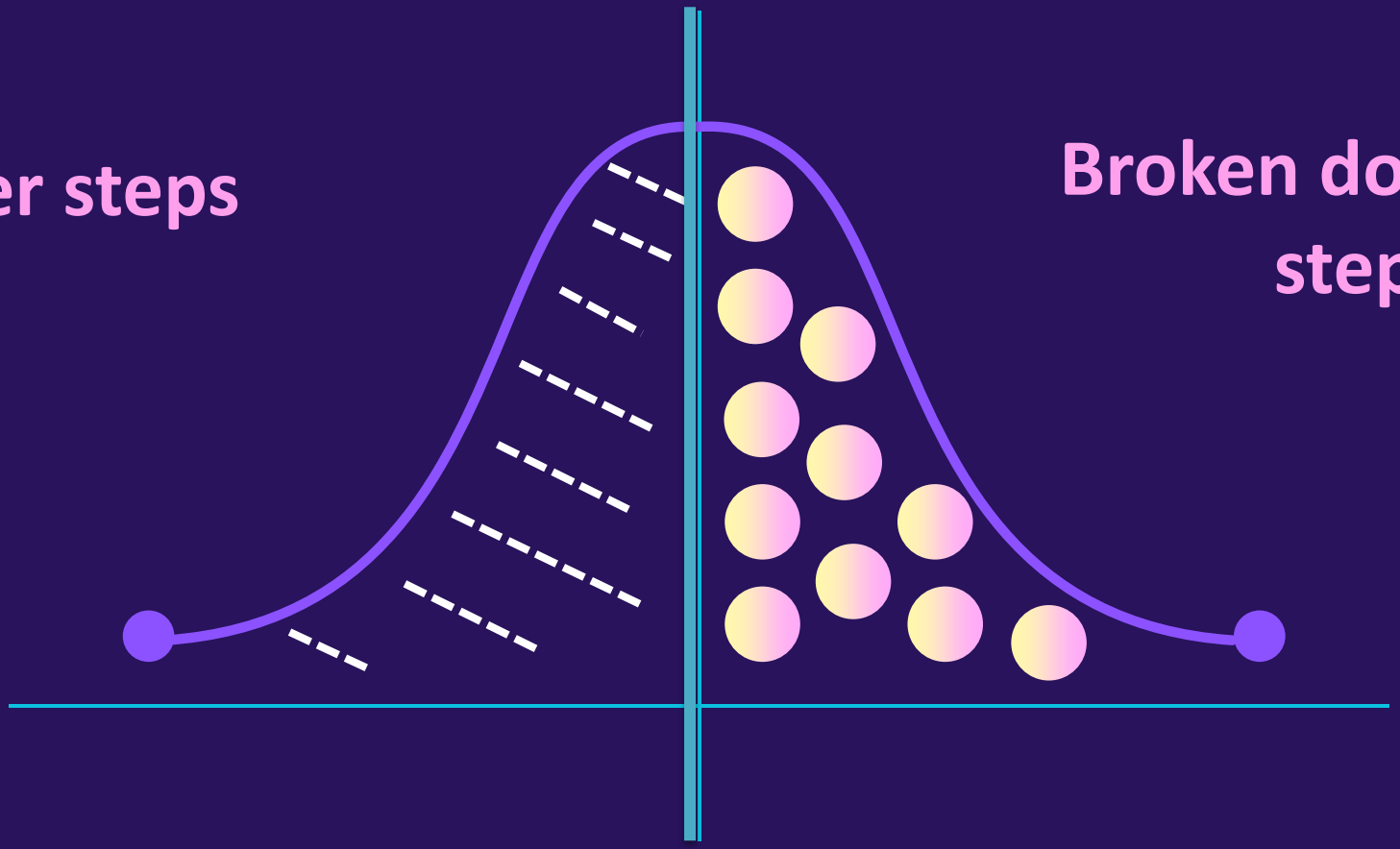

Lower Achievement Group

Higher Achievement Group

Neither type of task better for student engagement

☹

Is either task better for learning?

A Odd Containers

If this container was half full, what volume would remain empty?

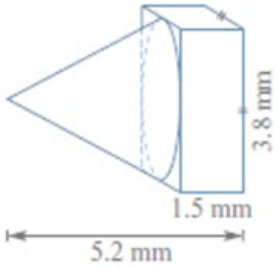

B Odd Containers

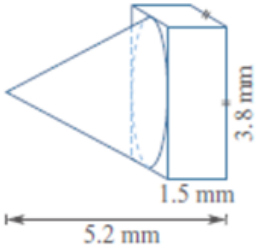

a) Calculate the height of the cone portion of this container.

b) If the volume of a cone is given by:

$V = \frac{1}{3}\pi r^2 h$

Find the total volume of the cone.

c) If this container was half-filled with a liquid, what volume would remain unfilled?

What does learning in mathematics look like?

A Theoretical Framework for Observing Actions Associated with Learning Mathematics

(Henningsen & Stein, 1997; Stein et al., 1996; Stein et al., 2009)

Increasing cognitive load

Watson & Sullivan (2008)	Memorisation	Procedural	Procedural with connection	Doing mathematics		
Mathematical Fluency	Repetitious Rules/formulae being reproduced Explanations Didactic	Approach is directed Focussed on producing correct answers Worked examples Didactic Explanation on performing procedure			No collaboration or discourse	No struggle or non-productive struggle
Strategic Competence	none	Solves	Represents Uses multiple representations	Formulates Generalises		
Adaptive Reasoning	none	none	Logical Connects concept underlying the procedure Dialogic	Reflects Justifies	Collaboration & discourse (Lijedahl, 2021)	Productive struggle (Bjork &Bjork, 2020)
Conceptual Understanding	none	none		Communication Incorporate use of models Variety of approaches Complex thinking Requires exploration Questioning to connect concepts Dialogic		

Increasing cognitive load

passive, inattentive, working individually, constraint, having correct answers, remembering

active, attentive, working collaboratively, freedom, explaining, knowing how and why

Lozano (2017)

Who had the pre-requisite knowledge?

Name: Class: Please work out the volume for each shape.

1.

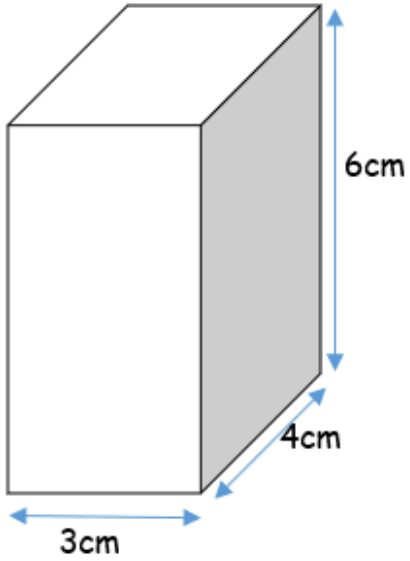

2.

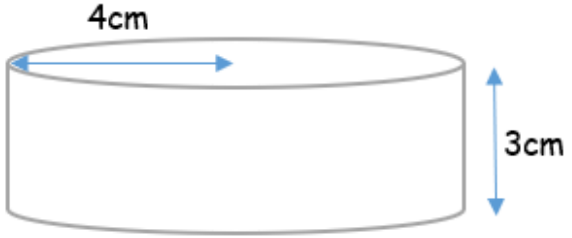

3.

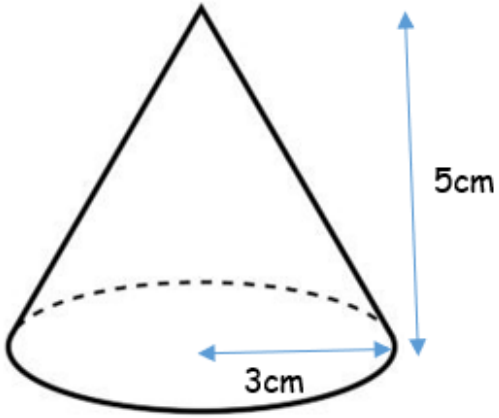

Students completing the traditional appearance task

B Odd Containers

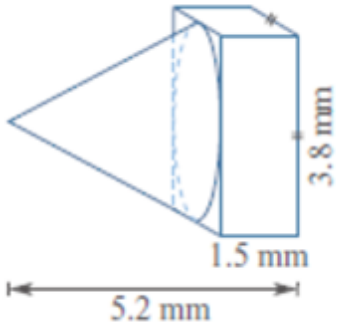

a) Calculate the height of the cone portion of this container.

b) If the volume of a cone is given by:

$V = \frac{1}{3}\pi r^2 h$

Find the total volume of the cone.

c) If this container was half-filled with a liquid, what volume would remain unfilled?

Grant & Henry	
Ina & Julie	
Kim & Luca	

Students completing the simple appearance task

A Odd Containers

If this container was half full, what volume would remain empty?

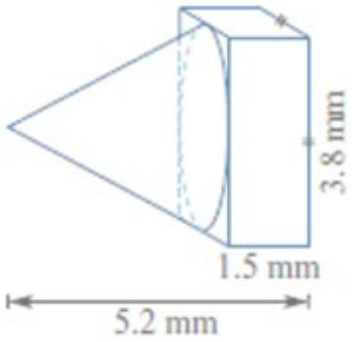

Ann & Bec

Carol & Danh

Eduardo & Faruk

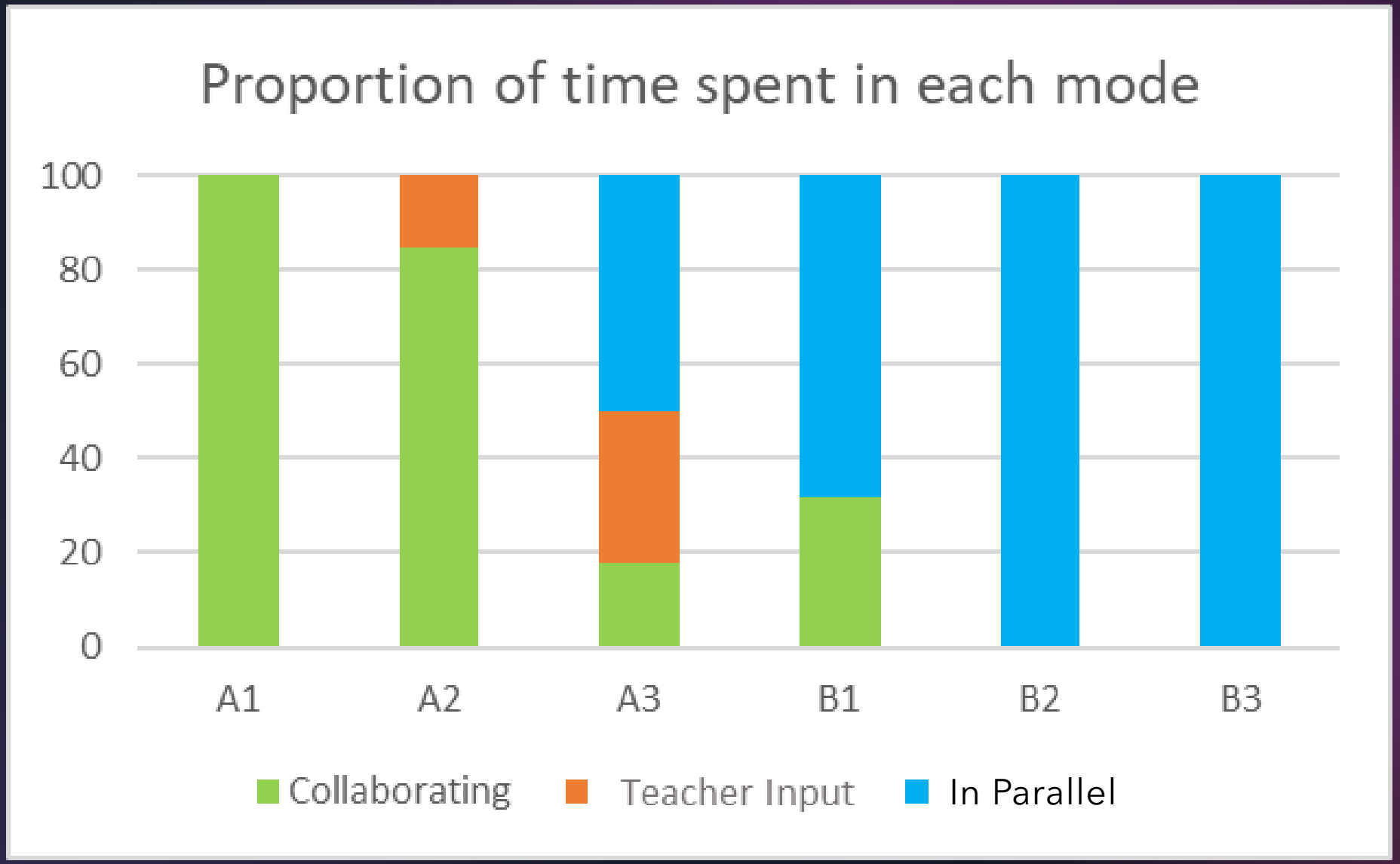
Proportion of time spent in each mode
100
80
60
40
20
0
A1
A2
A3
B1
B2
B3
Collaborating
Teacher Input
In Parallel

Can any students do this calculation 6 weeks later?

A Odd Containers

If this container was half full, what volume would remain empty?

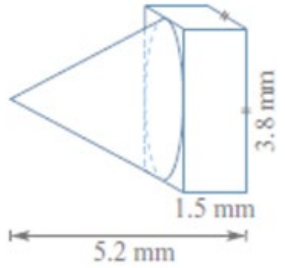

B Odd Containers

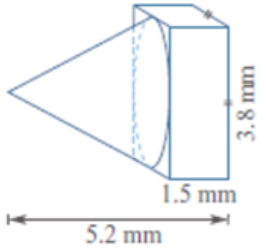

a) Calculate the height of the cone portion of this container.

b) If the volume of a cone is given by:

$V = \frac{1}{3}\pi r^2 h$

Find the total volume of the cone.

c) If this container was half-filled with a liquid, what volume would remain unfilled?

How would you work out the volume of this shape?

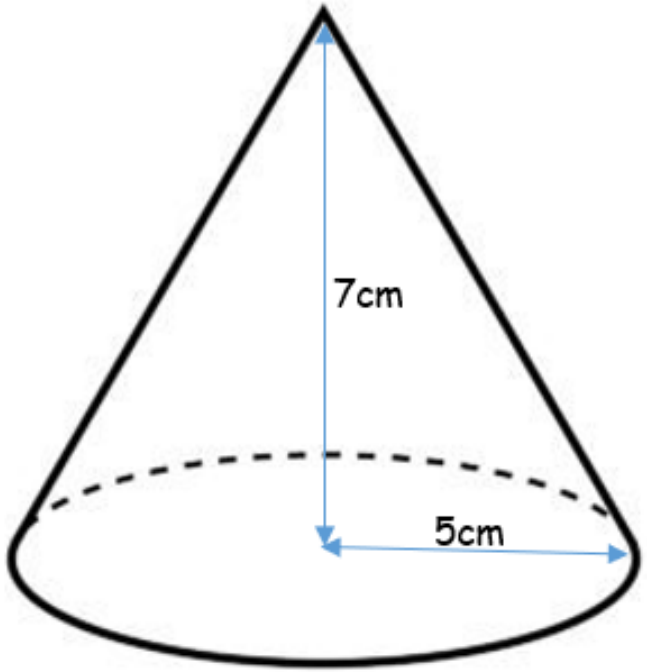

Students completing the simple appearance task

A Odd Containers

If this container was half full, what volume would remain empty?

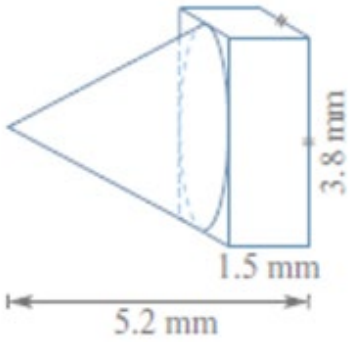

Ann & Bec

Carol & Daph

Eduardo & Faruk

Students completing the traditional appearance task

B Odd Containers

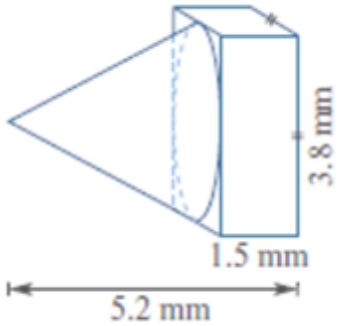

a) Calculate the height of the cone portion of this container.

b) If the volume of a cone is given by:

$V = \frac{1}{3}\pi r^2 h$

Find the total volume of the cone.

c) If this container was half-filled with a liquid, what volume would remain unfilled?

rant & Hen

a & Juli

Kim & Luca

13. Out of 100 customers selected for a mobile internet usage survey, 63 customers were aged less than 25 years, 28 customers were aged 25–65 years and the rest were aged over 65 years.

a. Write the ratio of customers aged 25–65 years to those aged less than 25 years.

b. Write the ratio of customers aged over 65 years to those aged 25–65 years.

c. Write the ratio of customers aged less than 25 years to the total number of customers surveyed.

d. Write the number of customers aged less than 25 years as a fraction of the total number of customers surveyed.

REJECTED PAGE

A

Estimating Percentages

1a. Each of these line starts at 'S'. Estimate the percentage of each line which is between S and where the arrow points. (Record your estimates in a table similar to the one below.)

Question	*Estimate*	*Answer*	*Difference*
i			
ii			
iii			
iv			
v			
		Sum of the differences	
		Average error	

1b. Check your estimates with the correct answers found by measuring the various lengths and calculating the percentage using:

$$P = \frac{\text{length to arrow}}{\text{length of line}} \times 100$$

1c. Find your average error.

Average error (A) = sum of the differences ÷ 5

B

Estimating Percentages

i

If the whole line is 100%, estimate the percentage of the line to the arrow.

Prove it!

How good was your estimate?

Estimate and prove the percentages for these lines.

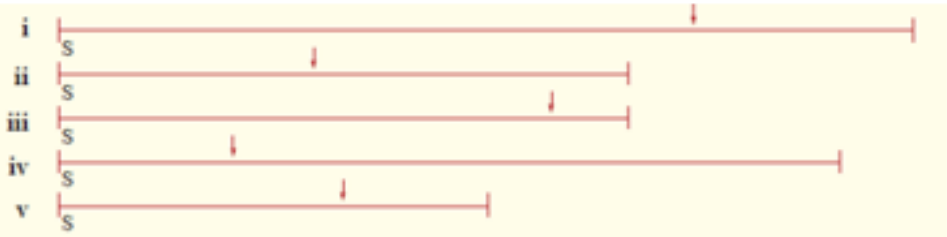

How far out are your estimates from the real answers?

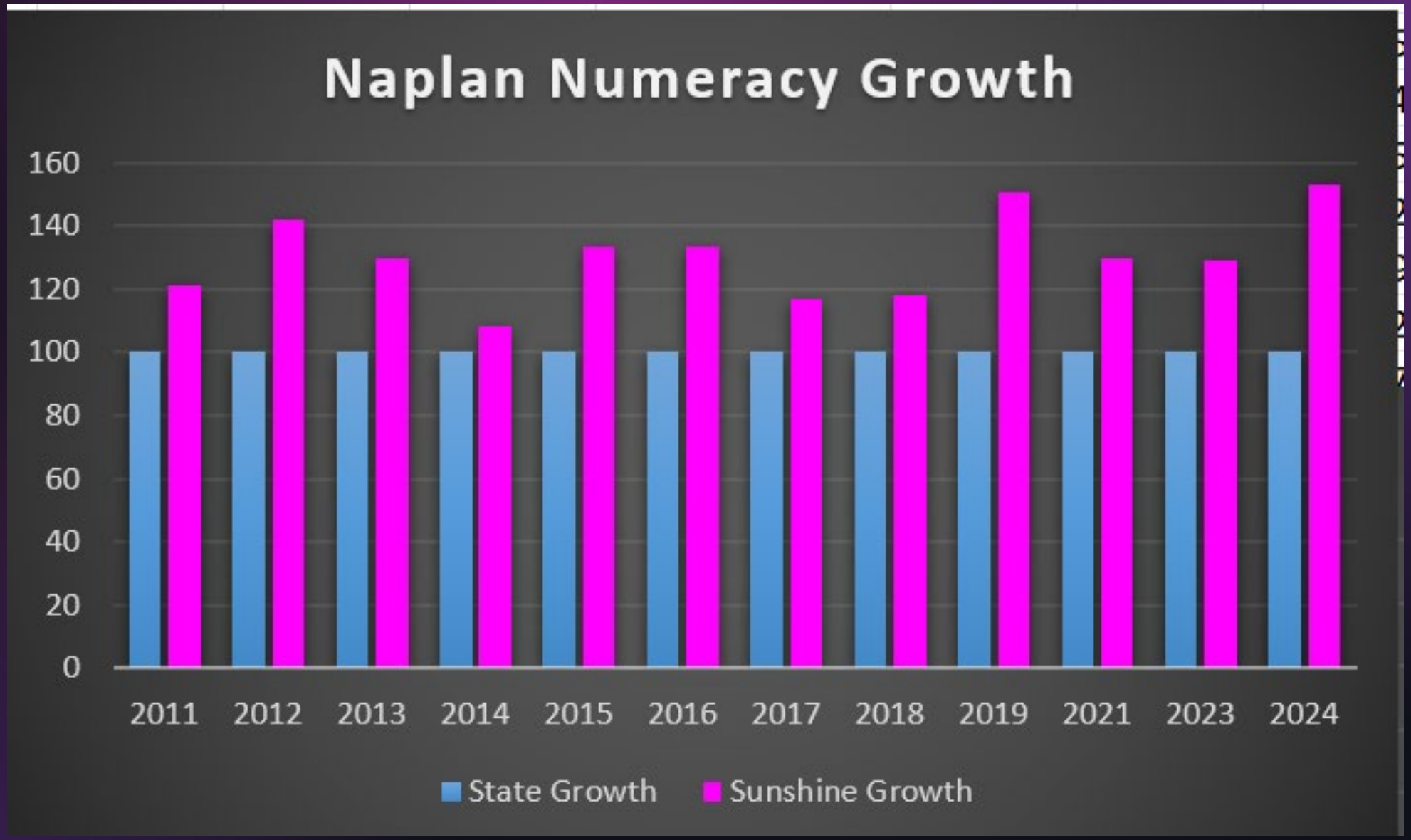
Naplan Numeracy Growth
160
140
120
100
80
60
40
20
0
2011
2012
2013
2014
2015
2016
2017
2018
2019
2021
2023
2024
State Growth
Sunshine Growth

Yvonne.reilly@education.vic.gov.au